PRESLIA (PRAHA)
43 : 1—4, 1971

Root System of Tropical Trees 6.
The Aerial Roots of *Entandrophragma angolense* (WELW.) C. DC.

Kořenový systém tropických dřevin 6.
Vzdušné kořeny u *Entandrophragma angolense* (WELW.) C. DC.

Jan Jeník

Department of Botany, Caroline University of Prague, Benátská 2, Praha 2

Received March 13, 1970

Abstract — JENÍK J. (1971): Root system of tropical trees 6. The aerial roots of *Entandrophragma angolense* (WELW.) C. DC. — Preslia, Praha, 43 : 1—4. — The aerial roots frequently observed in *Entandrophragma angolense* (WELW.) C. DC. (*Meliaceae*, Tropical Africa) do not represent a special kind of root modification developed by natural growth in aerial space. They arise from stiff superficial roots pulled out of the soil after deviation of the centre of gravity of a tree exposed to strong wind. Statical calculations suggest tension forces amounting to 20,000 kilograms by which a single root is drawn out of the ground.

Introduction

Aerial roots are a common feature of many trees composing tropical ombrophilous forests. Most conspicuous are stem-borne adventitious roots developing at the base of a tree and forming well known stilt roots. The morphogenesis of large stilt roots is well understood since all stages of gradual development of these organs can be readily observed on a single tree. There are, however, many root forms the origin of which has not been explained hitherto.

Among numerous root modifications observed in African forests, large aerial roots of *Entandrophragma angolense* (WELW.) C. DC. (*Meliaceae*) attracted attention of both foresters and botanists. RICHARDS (1952 : 69) referring to some rain-forest trees with "roots running horizontally for enormous distances above the surface of the ground", gave *Entandrophragma angolense* as a characteristic example of the African forests (see also l. c.: Pl. IIIB). TAYLOR (1960) described thick surface roots (l. c.: 23) and large surface roots spreading 40 cm above the ground (l. c.: 185) in the same species.

In the course of our ecological work in the rain forest in Ghana, we have examined the aerial roots of *Entandrophragma angolense* in several forest reserves. The appearance of these thick and long roots crawling like huge snakes above the ground surface is a very peculiar phenomenon in the forest interior. We have gathered all available evidence to explain the origin and development of these structures, and the following is our account of the results.

Vol. 42, No 4 (p. 297—392) editum 28.10.1970

Observations in Ghana

Both from ecological and from economical points of view, *Entandrophragma angolense* is an important tree in the African rain forest. In Ghana, this species may reach a diameter of 2 metres above buttresses, and a height of 45 metres. A large open crown, heavy limbs and branches in the crown, strong bole, short buttresses or root spurs running out into thick surface roots are characteristic features of older trees. Further details of the morphology are given in HUTCHINSON et al. (1968) and IRVINE (1961).

Specimen trees of *Entandrophragma angolense* were studied in the Esukawkaw Forest Reserve and in the surroundings of the Agricultural Research Station near Kade, with regard to the morphogenesis of their aerial roots reported in the above mentioned literature. About 20 trees, both old and young specimens, were examined and their root and stem morphology recorded. Free-drained ferrallitic soil was a characteristic substratum at all sites concerned.

The evidence derived from these comparative observations can be summarised as follows:

1. Only older trees exhibited thick superficial roots crawling on the soil surface, frequently more exposed than buried in the earth.
2. Aerial roots spreading horizontally above ground appeared in the largest emergent trees.
3. All aerial roots observed were progressively thickened roots, usually more than 20 cm in diameter.
4. No young stages in the growth of horizontal aerial roots could be found.
5. Arising from a short buttress or root-spur, the proximal part of the aerial root was situated at the ground level; with greater distance from the tree, the root gradually rose to a height of about 0.5 metres above ground, the elevated portion being 5 to 10 metres long; at its distal end, the aerial root curved down to the ground ultimately disappearing in the soil.
6. The aerial portions of the roots were sporadically propped by thin vertical sinker roots; these sinkers were conspicuously straightened, as if stretched by tension force (Plate I : 1).
7. Large knees occasionally encountered on the aerial roots seemed to be twisted from their original horizontal position (Plate I : 1).
8. In trees possessing aerial roots only 1 or 2 large roots showed actual aerial portions, while other horizontal roots remained in the supperficial position.
9. As observed from the ground, no excessive inclination of the bole of trees possessing aerial roots could be recorded.

Interpretation of the aerial roots

The origin of superficial roots encountered in large *Entandrophragma* trees can easily be explained in terms of radial growth of the root body. Thin roots originally spread in the surface layer of the soil, extend by radial growth, and the upper portion of the root cylinder gradually get exposed.

For the development of the aboveground roots three possible factors can be responsible:

1. The root actively grows and spreads in the aerial space.
2. The root is exposed by water erosion which removes the surface layer of soil.
3. The root is pulled out of the soil by rough mechanical force.

In the observed specimens of *Entandrophragma angolense*, active growth of horizontal roots in aerial space is next to impossible. No young aerial roots could be observed, and sinker roots which might prop the long horizontal sections were very few. On the flat surface of the rain forest with soil well

reinforced by roots, removal of soil under the aerial roots is also improbable. The third interpretation is thus the only solution.

In our opinion, the aerial roots of *Entandrophragma* originate in mature trees emerging from the general canopy of the rain forest, under the influence of violent winds (tornadoes). Both frequency of tornadoes in the West Africa, and general morphology of *Entandrophragma angolense* suggest this anticipatory conclusion.

The whole area of the West Africa is subject, at irregular intervals, to tornadoes. They occur at the beginning and end of the wet season along the northern edge of the monsoon, where the air is in a state of instability between the north-east and south-east winds. WALKER (1962 : 21) remarks that gusts of 80 km per hour or over can be expected twice a year on the coast and three times a year in the interior of Ghana.

The large heavy crown of an emergent tree of *Entandrophragma angolense* is exposed to strong winds which can markedly deviate its centre of gravity, shift the vertical axis of the bole and pull out superficial roots of the soil. Unlike in young flexible trees, the stiff structure of the old bole and the progressively thickened roots cannot buffer the impact of mechanical force exerted by wind upon the exposed crown. Even a relatively small shift of the centre of gravity of the huge tree increases the strains inside the tree. On the windward side of the tree, roots are pulled out of the soil; on the leeward side of the tree, roots are pressed down into the soil (Fig. 1). Owing to the resistance of the soil, the changes in the position of the roots on the leeward side are hardly visible. On the opposite side, however, the weakly anchored roots are pulled out reaching a height which is proportional to the deviation of the centre of

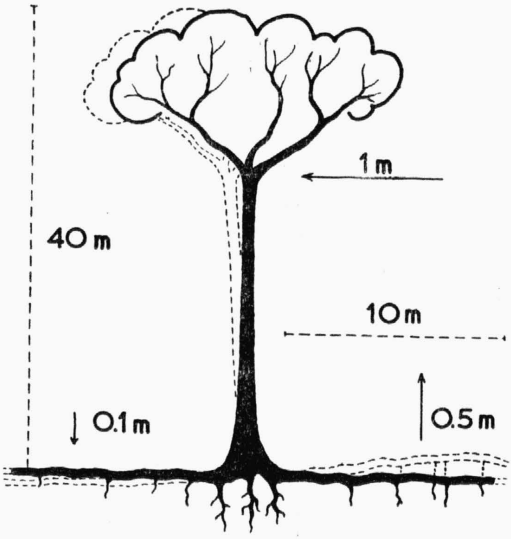

Fig. 1. — Presumed changes of the position of roots and stem in older *Entandrophragma angolense* exposed to the influence of violent wind of 80 km per hour velocity.

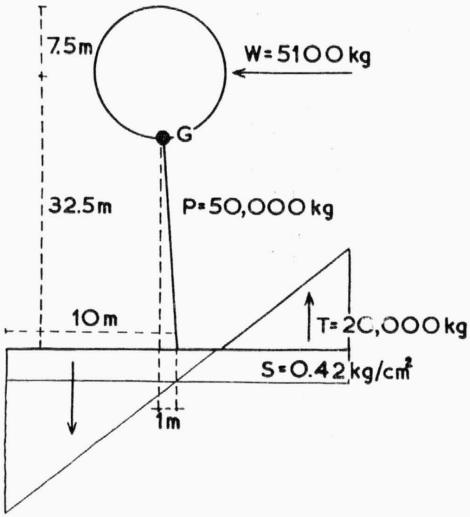

Fig. 2. — Diagram of the tension force (T) exerted upon a horizontal root of a large tree of *Entandropragma angolense*; P — weight of the biomass of the tree, S — force weighing down 4 main horizontal roots, G — centre of gravity, W — force exerted by wind speed of 80 km per hour.

gravity. Irreversible distortion and damage of the stiff roots and buttresses on both sides of the tree result in the permanent feature of the "aerial roots".

Statical calculations

In order to estimate the force exerted upon a horizontal root of *Entandrophragma angolense*, calculations were done for a model tree under the following premises (see also Fig. 2):

1. A tree of 40 metres height possesses 4 horizontal roots of 0.3 metre diameter and 10 metres length, arranged in a cross.
2. Wind of 80 km per hour velocity is streaming in the direction of two opposing roots, causing deviation of the centre of gravity amounting to 1 metre.
3. The roots are strained by forces caused by the blowing wind and by the deviated centre of gravity.

Using available statical formulas and tables, the tension force pulling out a single horizontal root of the soil was estimated as 20,000 kilograms. This great force cannot be counterbalanced by the weak sinker roots and the distal end of the root. Partial uprooting of the tree with emerging aerial roots on the windward side of the tree is an unavoidable result of the wind action.

Acknowledgement

The co-operation of Mr. I. Vaníček, Department of Geotechnics, Technical University of Prague, is gratefully recorded.

Souhrn

U afrického stromu *Entandrophragma angolense* (WELW.) C. DC. (*Meliaceae*) jsou v literatuře popisovány mohutné vzdušné kořeny, jejichž vznik nelze vysvětlit ani jejich přirozeným růstem v nadzemní vrstvě, ani druhotným obnažením vlivem vodní erose. Na základě pozorování v deštných lesích Ghany vysvětluje autor vznik těchto kořenů vlivem účinku vichřicí, které působí na staré stromy, vynikající nad úroveň hlavního zápoje lesa. Vichřice vychýlí trvale těžiště starých stromů z původně svislé osy a působí obrovskou tahovou silou na slabě zakořeněné povrchové kořeny na návětrné straně stromu. Statickým výpočtem pro modelový strom byla odhadnuta tahová síla, která zvedá jednotlivý kořen stromu při vychýlení těžiště o 1 m a při rychlosti vichřice 80 km v hodině na 20 000 kg. Tato síla vytrhne na návětrné straně stromu kořeny z půdy a vlivem ireverzibilních změn a poškození kořenů i kmene vzniknou trvalé „vzdušné kořeny".

References

HUTCHINSON J. et al. (1958): Flora of West Tropical Africa. Ed. 2. Vol. 1. — London.
IRVINE F. R. (1961): Woody plants of Ghana. — London.
RICHARDS P. W. (1952): The tropical rain forest. — Cambridge.
TAYLOR C. J. (1960): Synecology and silviculture in Ghana. — Edinburgh.
WALKER H. O. (1962): Weather and climate. — In: WILLS J. B. [ed.]: Agriculture and land use in Ghana, p. 7—50. — London—Accra.

Recensent: Z. Černohorský

See also plate I. in the appendix.

Photo 1. — An aerial root of *Entandrophragma angolense* (WELW.) C. DC. propped by two weak sinker roots (marked by the arrows), in the Esukawkaw Forest Reserve, Ghana.
Photo 2. — Portion of an aerial root of *Entandrophragma angolense* in the interior of the rain forest in Ghana.

J. Jeník: Root System of Tropical Trees 6. The Aerial Roots of *Entadrophragma angolense* (WELW.) C. DC.